6	2	10	1	July 83

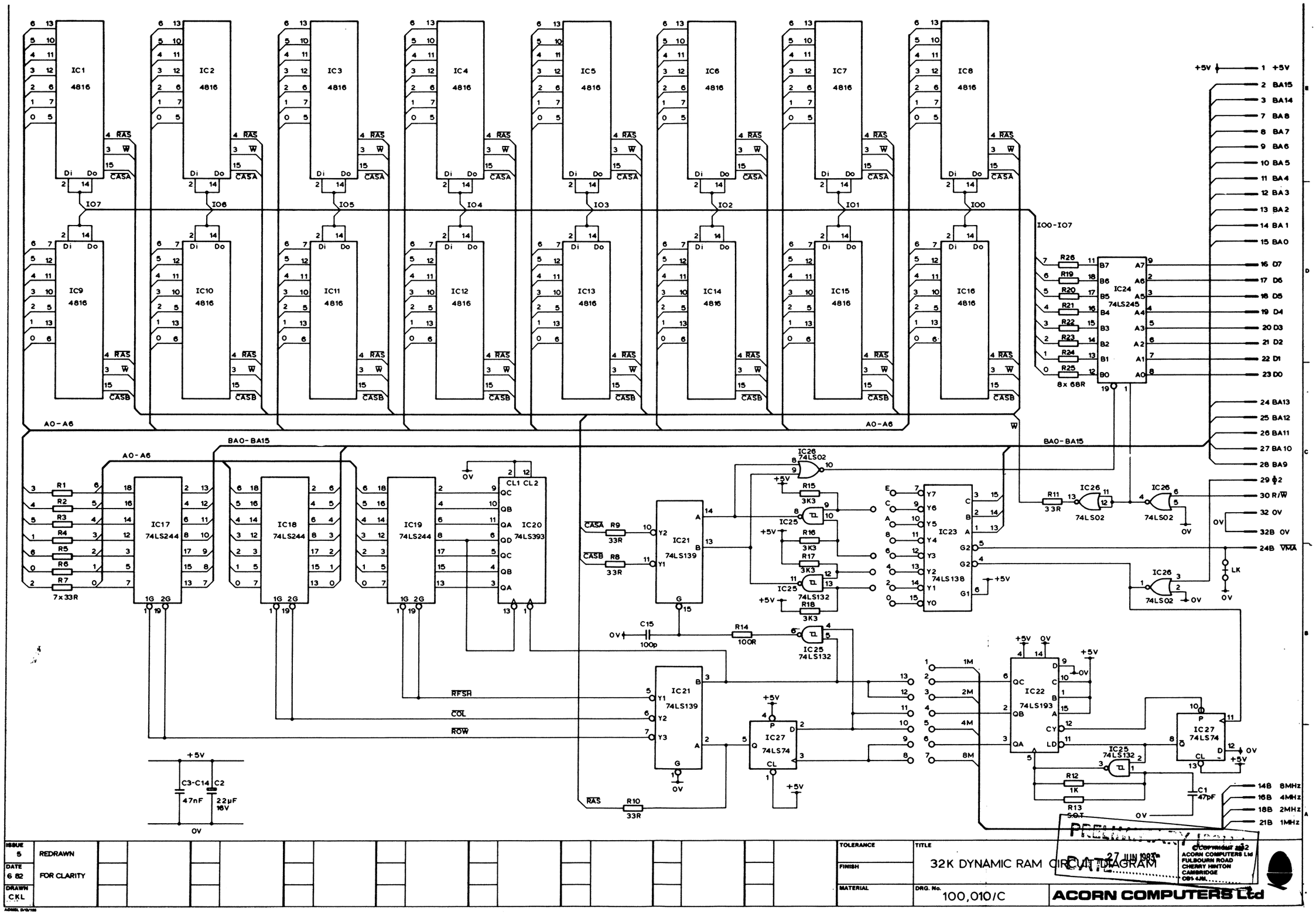

ISSUE 5	REDRAWN
DATE 6 82	FOR CLARITY
DRAWN CKL	

TOLERANCE

FINISH

MATERIAL

TITLE: 32K DYNAMIC RAM CIRCUIT DIAGRAM

DRG. No. 100,010/C

ACORN COMPUTERS Ltd

PRELIMINARY ISSUE
DATE 27 JUN 1983
© COPYRIGHT 1982
ACORN COMPUTERS Ltd
FULBOURN ROAD
CHERRY HINTON
CAMBRIDGE
CB1 4JN